**DATASHEET**

# Varifocal Auto Iris Lens

## 5MegaPixel

MODEL: VS-LEN50622CS

# SPECIFICATION

| | | |
|---|---|---|
| **Focal Length** | | 6-22mm |
| **Aperture** | | F1.6 |
| **Image Size** | | 1/2.5" |
| **Horizontal Angle of View** | | 46°4'~16°3' |
| **Mount Type** | | CS |
| **Minimum Object Distance** | | ≥0.3m |
| **Operation Mode** | **Iris** | Auto |
| | **Focus** | Manual with lock |
| | **Zoom** | Manual with lock |
| **External Dimensions (mm)** | | Ø 33(D) x 44.1(L) |
| **Net Weight** | | 66g |
| **Back Flange Length** | | 12.526mm |
| **Remark** | | 5MP DC Drive IR Lens |

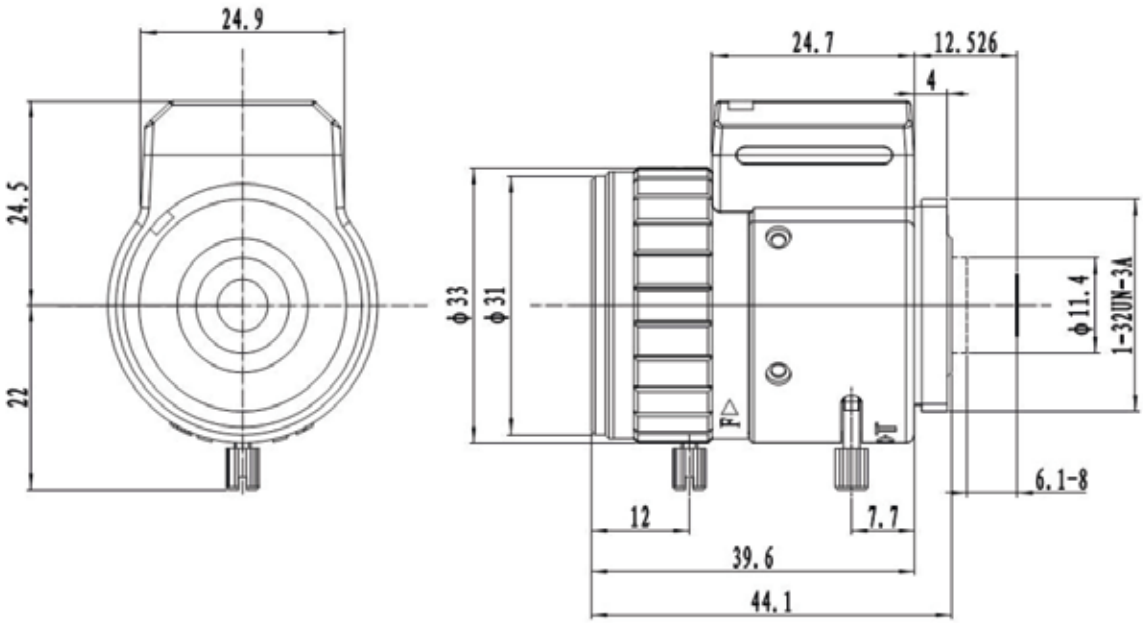


© 2016. Mach Power. All rights reserved. MACH POWER is a registered trademark.
Specifications are subject to change without notice
The images may be used for illustrative purposes